Flush Sidewall and Endwall Girts at Corner Column
Endwall Girt Attaches to Inner Flange with Bolted Clip
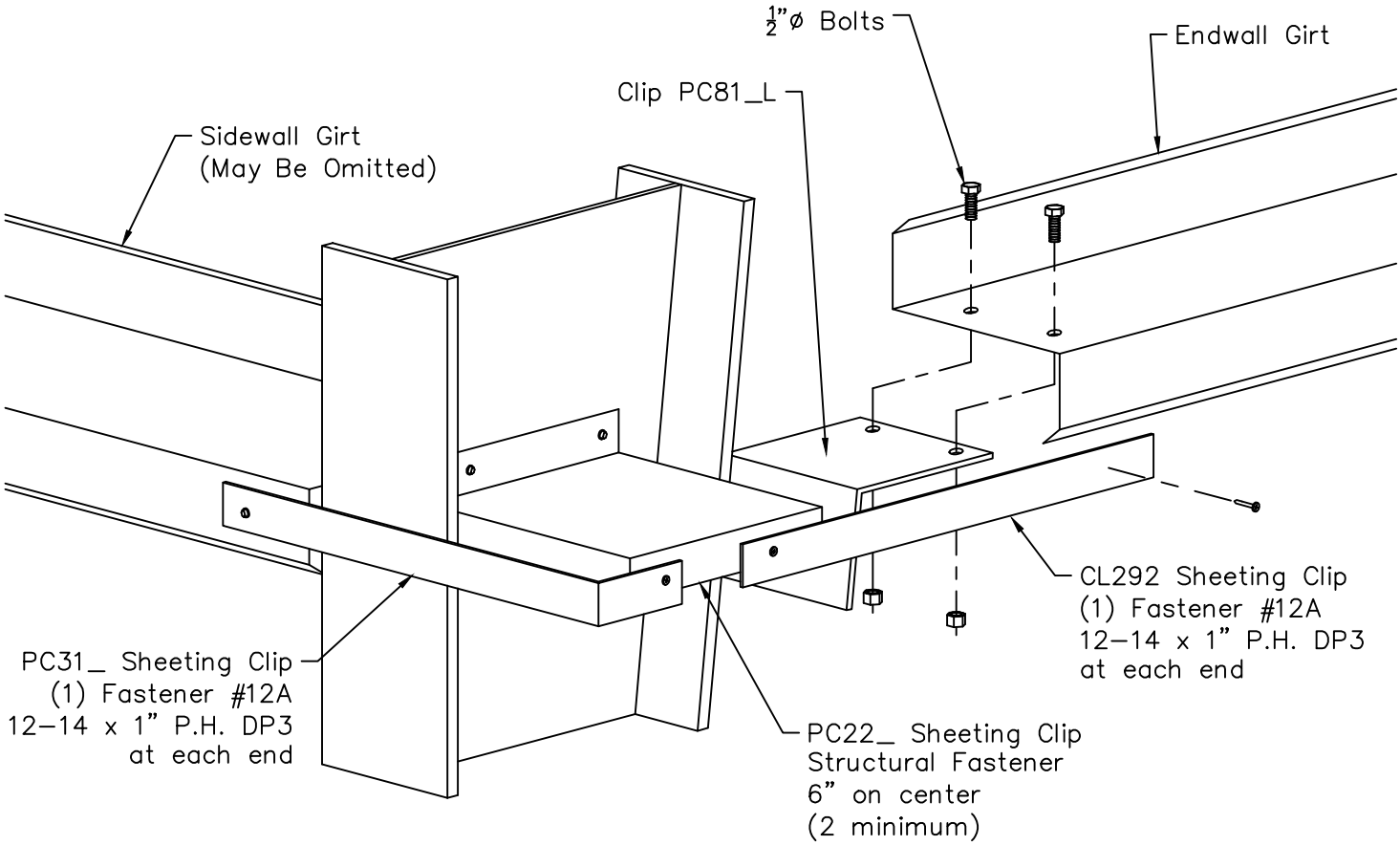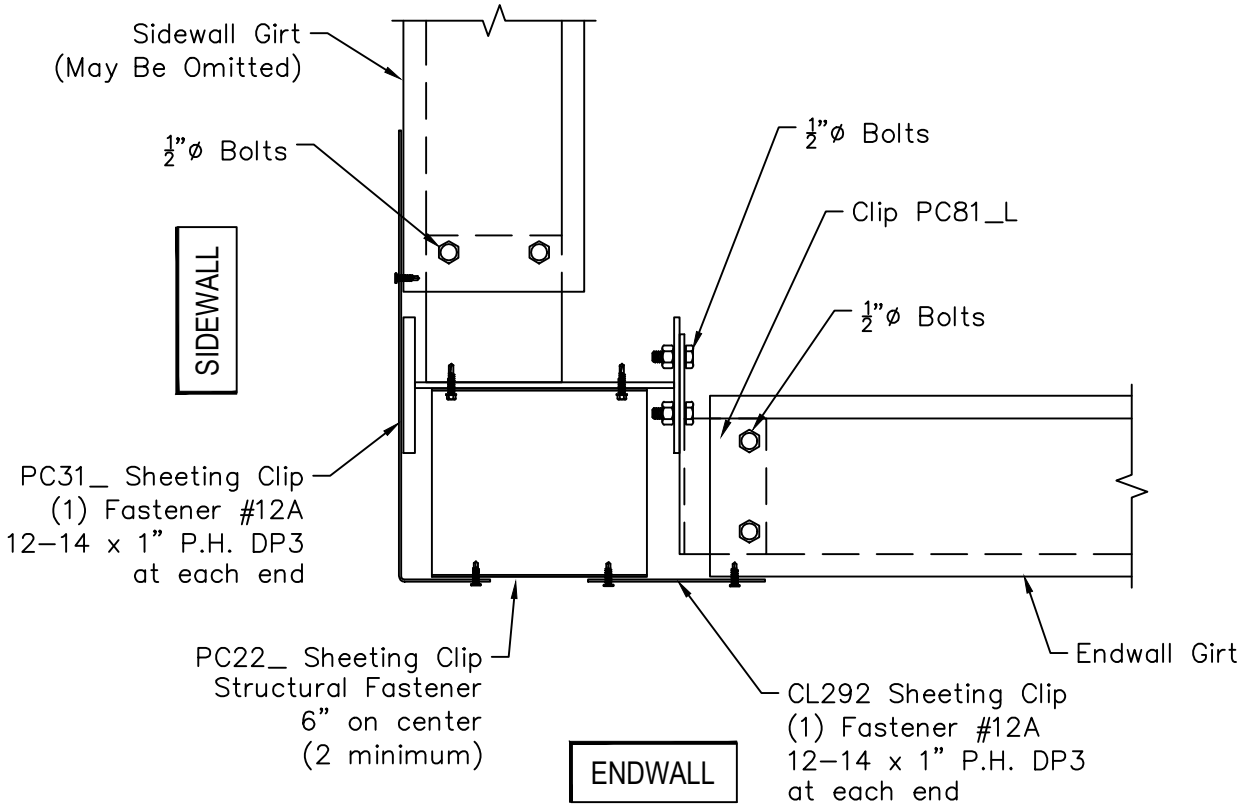
Page	Date	Rev.
EF03022	Feb '11	00